FE-ME-017
SNS Front-End Systems Technical Note
14/September/99

Mechanical Steering of the LEBT –Ion Source Assembly

Sam K. Mukherjee

This technical note is intended exclusively for internal use inside the SNS Front-EndSystems Group. The primary purpose of the technical note series is to promote rapid dissemination of results for work in progress. No formal review has taken place to ascertain the accuracy of its contents, or the consistency / compatibility of the information with other SNS work.

Mechanical Steering of the LEBT & The Ion Source

Sam K. Mukherjee
LBNL Mechanical Engineering

September 15, 1999

Scope

The H- ion beam coming out of the ion source is accelerated in the Low Energy Beam Transport (LEBT) section attached with the source. The source has tilt mechanism to compensate for the deflection of the H^- beam due to strong magnetic field at the source aperture. This tilt adjustment aligns the beam to the LEBT electrode center. The LEBT has beam-chopper type of special electrode, which can also do some beam steering. The final goal is to let beam center itself to the Radio Frequency Quadrupole (RFQ) section that follows the LEBT assembly. This adjustment can only be done during actual beam operation and hence the system has to be electrically isolated from the LEBT assembly. This technical note describes the mechanical steering facility available to do +/- 4mm in X-Y direction while the main LEBT chamber is under vacuum.

Description

The photo of the LEBT re-entrant cylinder assembly is shown below. The components affected by the steering, are the main insulator, the insulator flange, the LEBT assembly mounted at the end of the re-entrant cylinder and the ion source, mounted inside the reentrant cylinder. The total load of these components is 200pounds and is supported from the insulator flange.

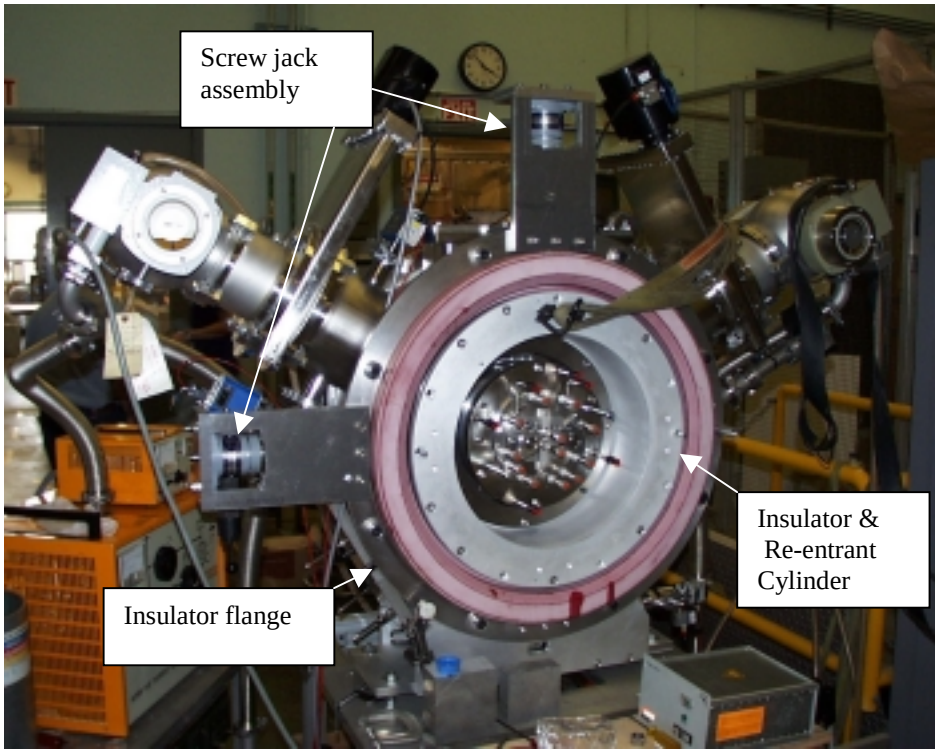

The Insulator Flange has 16 friction pads and an O-ring (27.75 I.D.) that stay in contact with the LEBT vacuum tank flange under atmospheric pressure outside. These pads provide the bearing contact during X-Y positioning of the whole assembly.
Two Jack Screw are mounted on the Insulator flange, at right angle from each other. When operated individually, the screw jack exerts sliding force on the LEBT assembly in the respective direction. The body of the jack is fixed with the flange through bracket. The screw jack spindle is connected to the flange of the vacuum tank through special claw-type bracket as shown below.

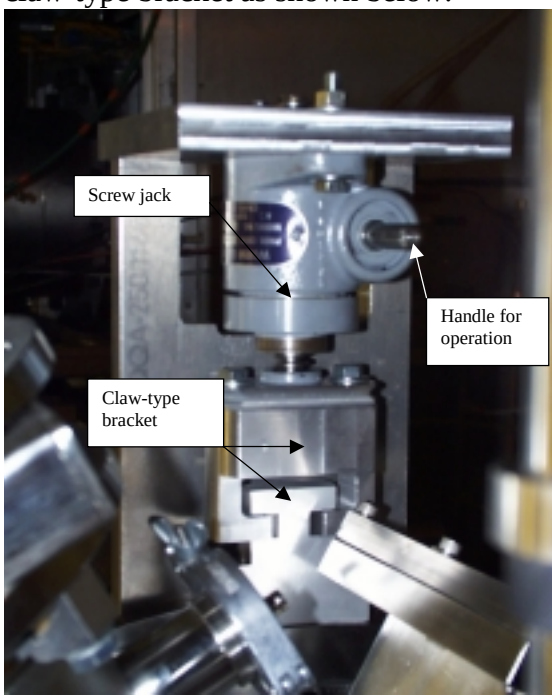

The Insulator flange has 16 pockets to hold the special DU pads. These pockets are machined .080 inch deep such that they are co-planner within tight tolerance (see drawing 21C9976). The DU bearing pads are .090 inch thick. This material is generally free from “stick-slip” and provides smooth sliding between adjacent surfaces.
The Insulator-flange is attached by epoxy with the main insulator concentrically with respect to the ID of the bore as shown below.

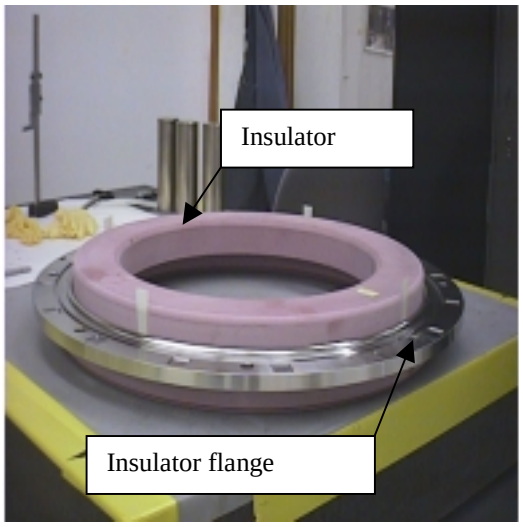

There are eight holes in the flange of .703 inches in diameter. When mounted by 3/8-inch shoulder screw with the LEBT tank flange, the radial difference of 4 mm determines the maximum range of X-Y adjustment. The ¼-inch diameter O-ring slides against the flange of the tank during adjustment maintaining the vacuum seal. The shoulder screw has length of 1.25 inches and engages a washer of specific thickness of .443 inches and a DU thrust washer (.059 inch thick). When fully tightened, the O-ring is compressed by 20% for initial rough pumping. During initial installation, the insulator flange assembly is indexed by three centering pin of closely fit tolerance. The DU pad material on both sides of the insulator flange provides easy sliding of the whole flange assembly.

The "Break-away" torque for the screw jack to overcome the normal vacuum load on the insulator assembly is calculated as follows:

Component	Weight (LBS.)
1. Ion source assembly	35
2. Ion source support structure	55
3. LEBT insulator / the reentrant cylinder.	92
4. LEBT assembly	18
Total weight	200

The DU pad material friction coefficient is = .082 (See Engineering Note M7564)
The vacuum load on the insulator face 0f 28 inches diameter = 8928 pounds
Total jacking force moving vertically up = 732+ 200=932 pounds
Total jacking force moving vertically down = 732-200 = 532 pounds
Total jacking force moving horizontally = 732 pounds
Screw jack capacity selected = 1 ton

Testing

The system was operated during the LEBT installation. After the insulator flange is indexed with the centering pins, the whole assembly was moved both in X-Y direction by operating the screw jack handle for maximum travel in one direction. No vacuum leak was observed between the LEBT tank flange and the Insulator flange. The screw jack handles are outside the high voltage enclosure. The gap in the claw-type bracket

described before, provide the travel range in one screw jack assembly when the other is operated.

Drawing List

21G9006	Mechanical steering, General arrangement
25B0696	Vacuum Chamber
21G8964	Insulator Assembly
21C9976	Insulator Flange
25B0716	Primary Reentrant Cylinder
25G8994	Spacer for Reentrant Cylinder
21G8972	Centering Pin
21C9273	Screw Jack assembly
21C9284	Screw Jack assembly parts

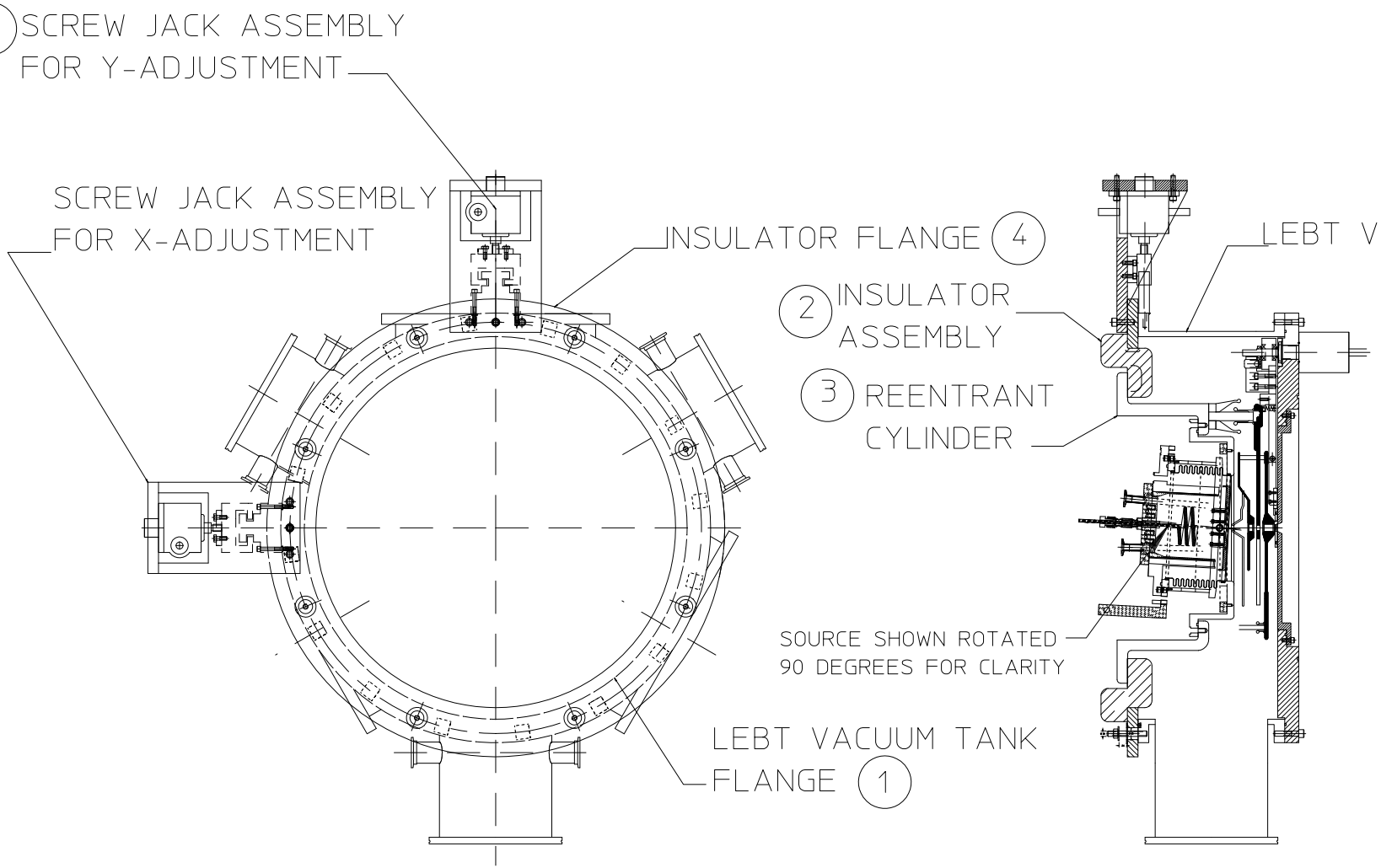

21G9006

REQD	ITEM	PART NO.	DESCRIPTION
2	4	21G9273	SCREW JACK ASSEMBLY
1	4	21C9976	INSULATOR FLANGE
1	3	25B0716	PRIMARY REENTRANT CYLINDER
1	2	21G8964	INSULATOR ASSEMBLY
1	1	25B0696	VACUUM CHAMBER

REV	DWG	CHK	ZONE	DATE	CHANGES

UNLESS OTHERWISE SPECIFIED
TOLERANCES: X ± .1 FRAC. ± 1/64; .XX ± .01 ANGLES ± 1°; .XXX ± .001 FINISH 125
THREADS ARE CLASS 2
CHAMFER ENDS OF ALL SCRW THREADS 30° CUT 1.5 PITCH THRD RELIEF WITH BRAND NOSE TOOL ON MACHINE CUT THREADS.
BREAK EDGES .016 MAX ON MACHINED WORK.
REMOVE BURRS WELD SPLATTER & LOOSE SCALE
REFERENCES: ANSI Y14.5 & B46.1

SHOP ORDERS
ACCT NO. | SERIAL NO.
DATE LOAD | DATE REQD. | NO REQD.
DELIVER TO
SURFACE TREATMENT: DEGREASE
IDENT METH.: TAG
DWG BY: S. MUKHERJEE DATE: 09-15-99
CHK BY: USUALLY NO ONE DATE: 00-00-00

LAWRENCE BERKELEY LABORATORY
UNIVERSITY OF CALIFORNIA-BERKELEY

SNS - FRONT END SYSTEM
LEBT ION-SOURCE MECHANICAL STEERING
GENERAL ASSEMBLY

PATENT CLEAR | DWG. TYPE: ASSEMBLY | SHOWN ON: 00X0000 | SCALE: FULL | DO NOT SCALE PRINTS
MICROFILMED | DESIGN ACCT. NO: 8210-14 | CATEGORY CODE: FE1100 | DWG. NO: 21G9006 | SIZE: - | REV.

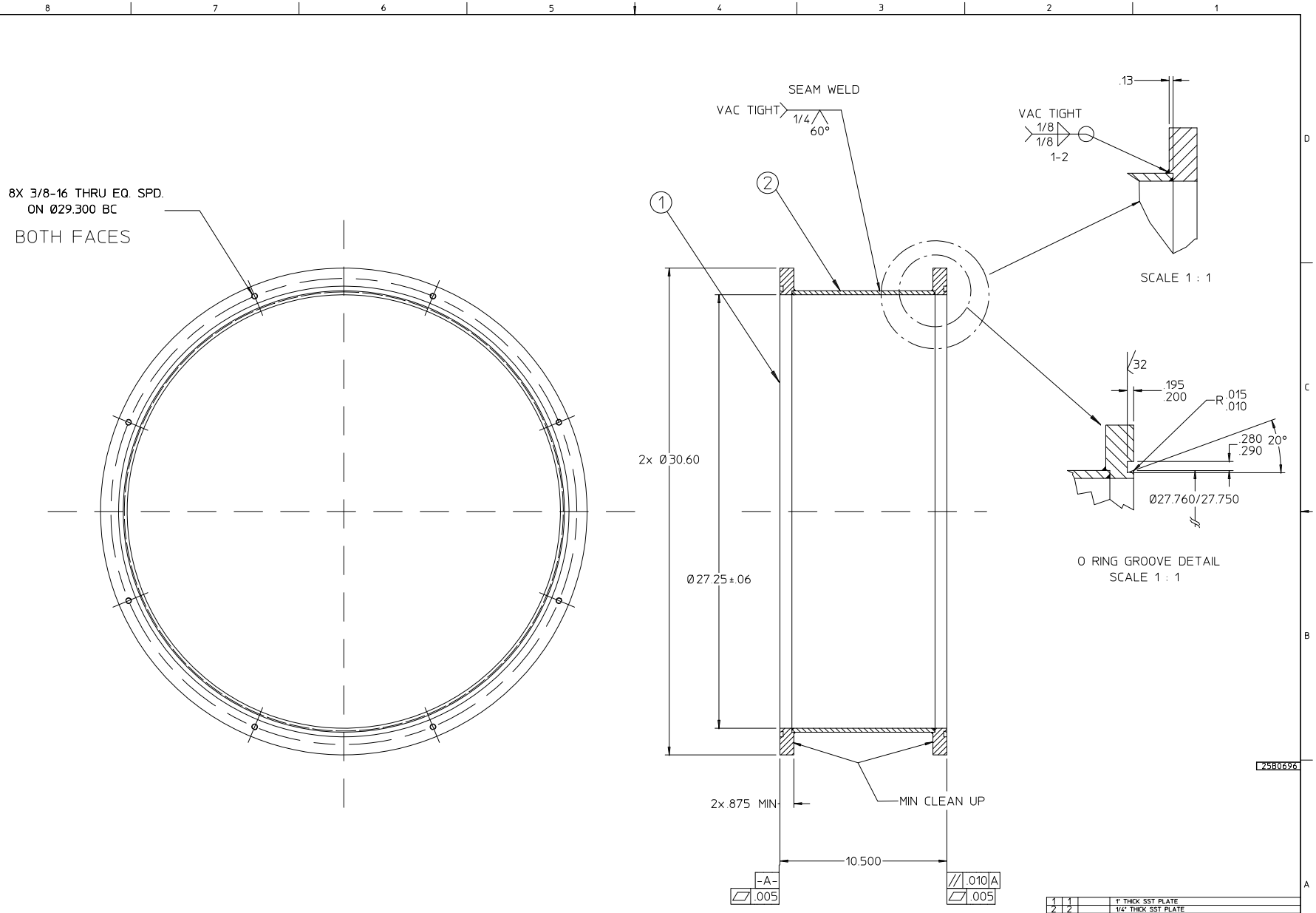

REQD	ITEM	PART NO.	DESCRIPTION
1	1		1" THICK SST PLATE
2	2		1/4" THICK SST PLATE

REV	DWG	CHK	ZONE	DATE	CHANGES

UNLESS OTHERWISE SPECIFIED
TOLERANCES: .X ± FRAC. ±1/64; .XX ± .030 ANGLES ± 1°; .XXX ± .015 FINISH 125
THREADS ARE CLASS 2
CHAMFER ENDS OF ALL SCREW THREADS 30° AT 1.5 FROM THIS RELIEF WITH BURRS NOSE TAIL ON MACHINE CUT THREADS.
BREAK EDGES .014 MAX. ON MACHINED WORK
REMOVE BURRS WELD SPLATTER & LOOSE SCALE
REFERENCES ANSI Y14.5 & B46.1.

SHOP ORDERS
ACCT NO. | SERIAL NO.
DATE ISSD. | DATE REQD. | NO. REQD.
DELIVER TO
SURFACE TREATMENT: ELECTRO POLISH
IDENT. METH.: TAG
DWG. BY: J. M. PRUYN | DATE: 3/30/99
CHK BY: D. CHENG | DATE: 3/31/99

LAWRENCE BERKELEY LABORATORY
UNIVERSITY OF CALIFORNIA-BERKELEY
SNS FRONT END
LEBT TEST STAND
VACUUM CHAMBER

PATENT CLEAR | DWG. TYPE: ASSEMBLY | SHOWN ON | SCALE: FULL | DO NOT SCALE PRINTS
MICROFILMED | DESIGN ACCT. NO.: 821014 | CATEGORY CODE | DWG. NO.: 25B0696 | SIZE | REV.

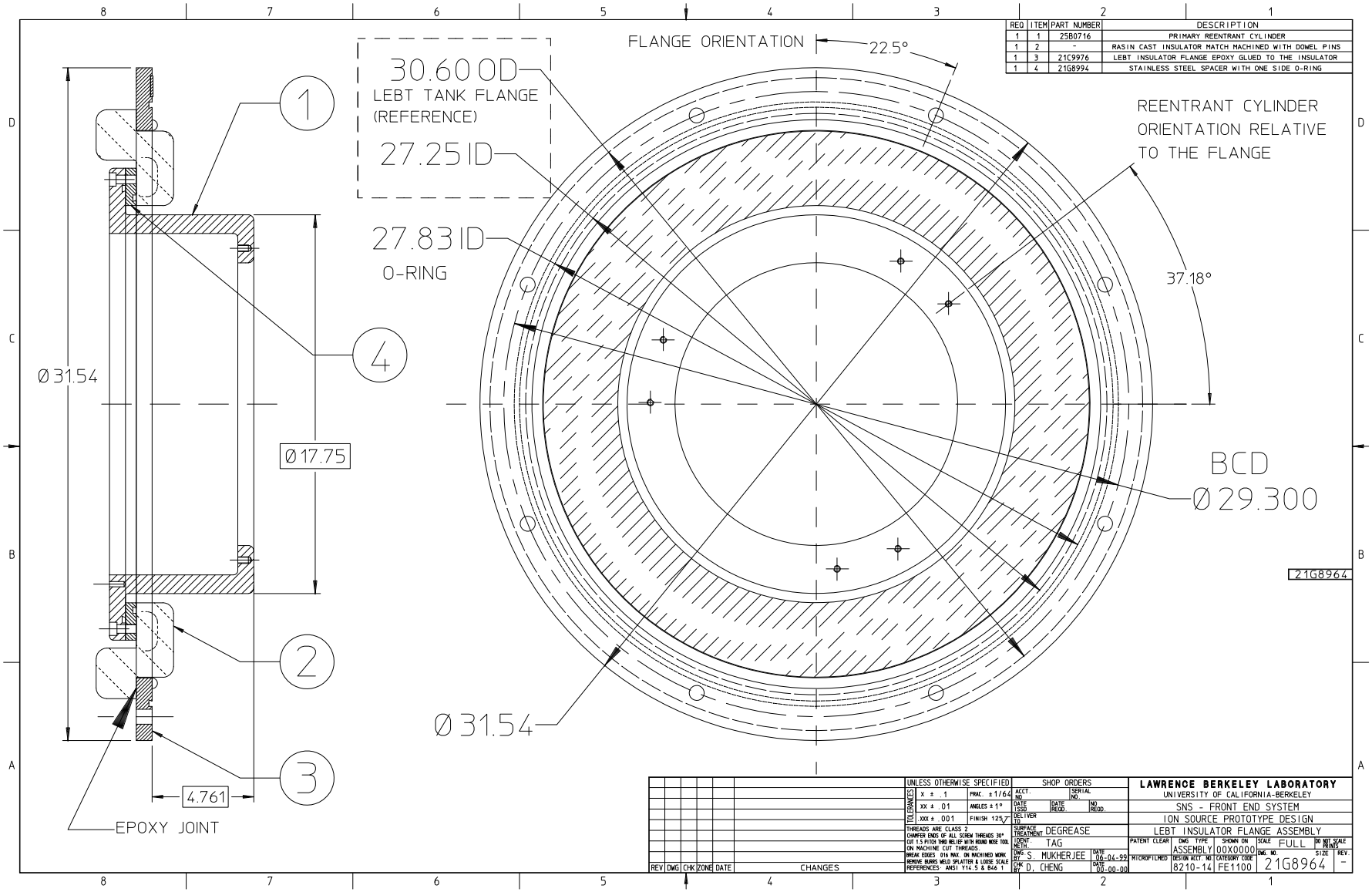

REQ	ITEM	PART NUMBER	DESCRIPTION
1	1	25B0716	PRIMARY REENTRANT CYLINDER
1	2	-	RASIN CAST INSULATOR MATCH MACHINED WITH DOWEL PINS
1	3	21C9976	LEBT INSULATOR FLANGE EPOXY GLUED TO THE INSULATOR
1	4	21G8994	STAINLESS STEEL SPACER WITH ONE SIDE O-RING

21G8964

REV	DWG	CHK	ZONE	DATE	CHANGES

UNLESS OTHERWISE SPECIFIED
TOLERANCES: X ± .1 | FRAC. ±1/64 | XX ± .01 | ANGLES ± 1° | XXX ± .001 | FINISH 125
THREADS ARE CLASS 2.
CHAMFER ENDS OF ALL SCREW THREADS 30° OAT 1.5 PITCH DIA RELIEF WITH ROUND NOSE TOOL ON MACHINE CUT THREADS.
BREAK EDGES .016 MAX. ON MACHINED WORK.
REMOVE BURRS WELD SPLATTER & LOOSE SCALE
REFERENCES: ANSI Y14.5 & B46.1

SHOP ORDERS
ACCT. NO.
SERIAL NO.
DATE ISSD
DATE REQD.
NO REQD.
DELIVER TO
SURFACE TREATMENT: DEGREASE
IDENT. METH.: TAG
DWG BY: S. MUKHERJEE DATE: 06-04-99
CHK BY: D. CHENG DATE: 00-00-00

LAWRENCE BERKELEY LABORATORY
UNIVERSITY OF CALIFORNIA-BERKELEY
SNS - FRONT END SYSTEM
ION SOURCE PROTOTYPE DESIGN
LEBT INSULATOR FLANGE ASSEMBLY

PATENT CLEAR	DWG TYPE	SHOWN ON	SCALE	DO NOT SCALE PRINTS
	ASSEMBLY	00X0000	FULL	
MICROFILMED	DESIGN ACCT. NO.	CATEGORY CODE	DWG NO.	SIZE / REV.
	8210-14	FE1100	21G8964	-

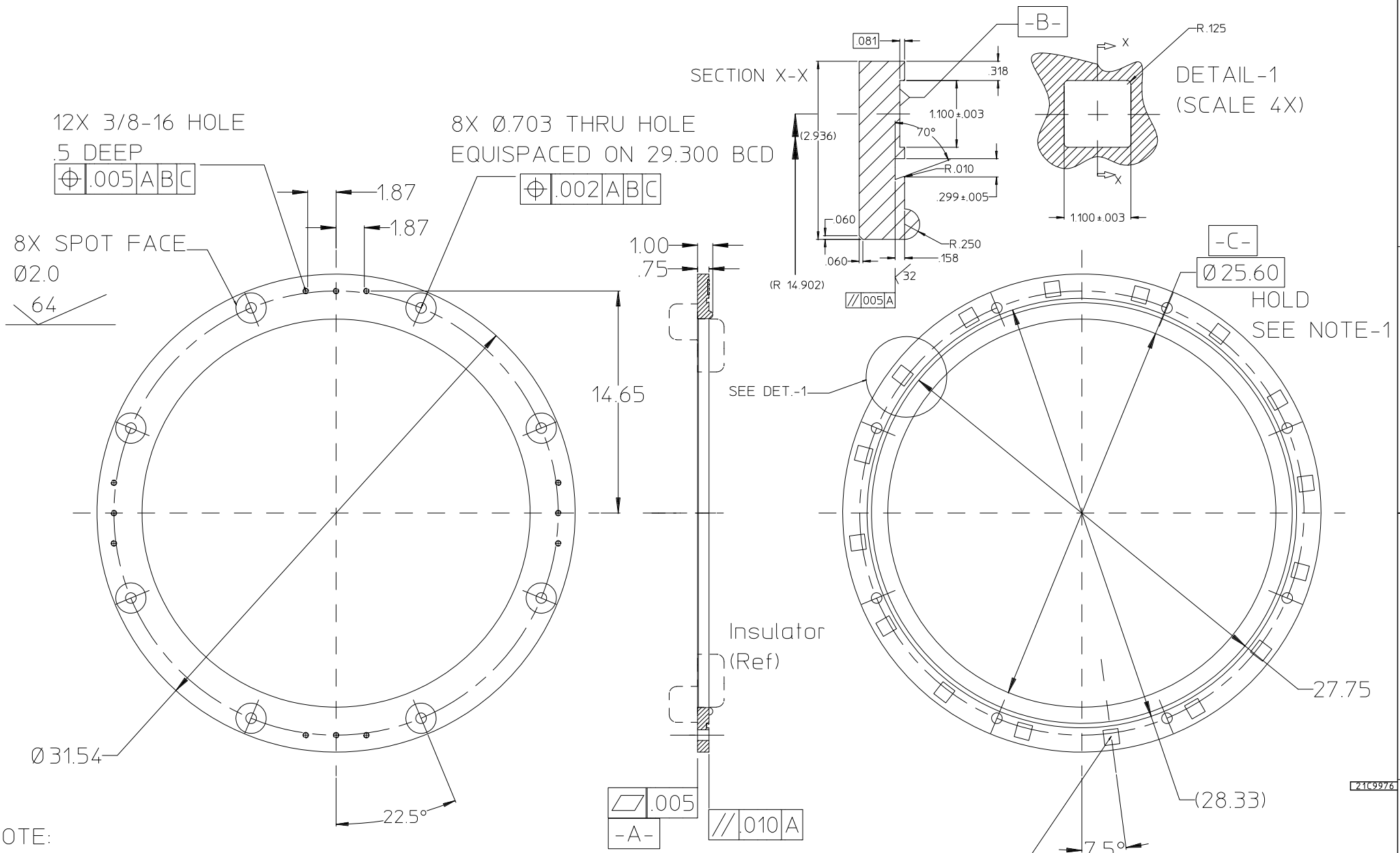

NOTE:

1. MATCH ID WITH THE RESIN INSULATOR O.D.
2. MACHINE THE .25R BULDGE (DET-1) FIRST THEN EPOXY GLUE WITH THE INSULATOR & CURE.
3. MILL THE FLANGE DETAILS (SHOWN HERE) AFTER CURE.
4. COPY CYLINDER OD (21G7296) FIXED WITH THE INSULATOR AS THE MACHINING CENTER FOR MILLING THE DETAILS (BCD).

REQD	ITEM	PART NO.	DESCRIPTION
1	1		304 STAINLESS STELL PLATE STOCK

REV	DWG	CHK	ZONE	DATE	CHANGES

UNLESS OTHERWISE SPECIFIED
X ± .1 FRAC. ± 1/64
.XX ± .01 ANGLES ± 1°
.XXX ± .001 FINISH 125
THREADS ARE CLASS 2
CHAMFER ENDS OF ALL SCRW THREADS 30° CUT 1.5 PITCH THRD RELIEF WITH ROUND NOSE TOOL ON MACHINE CUT THREADS.
BREAK EDGES .016 MAX ON MACHINED WORK.
REMOVE BURRS MOLD SPLATTER & LOOSE SCALE
REFERENCES: ANSI Y14.5 & B46.1

SHOP ORDERS
ACCT NO
SERIAL NO.
DATE ISSD
DATE REQD.
NO REQD.
DELIVER TO
SURFACE TREATMENT: DEGREASE
IDENT METH.: TAG
DWG BY: S. MUKHERJEE DATE: 05-18-99
CHK BY: USUALLY NO ONE DATE: 00-00-00

LAWRENCE BERKELEY LABORATORY
UNIVERSITY OF CALIFORNIA-BERKELEY
SNS - FRONT END SYSTEM
ION SOURCE PROTOTYPE DESIGN
LEBT INSULATOR FLANGE

PATENT CLEAR	DWG TYPE	SHOWN ON	SCALE	FULL	DO NOT SCALE PRINTS
	PART	00X0000			
MICROFILMED	DESIGN ACCT. NO	CATEGORY CODE	DWG. NO		SIZE REV.
	8210-14	FE1100	21C9976		-

8X 5/16-18 X .500 DP
EQ SPD ON Ø14.617 BC
DO NOT BREAK THRU
⌖ Ø .014 A B C

16 X Ø.406 THRU
X Ø.625 X .400 DP C BORE
EQ. SPD. ON Ø21.063 BC
⌖ Ø .014 A B C

(Ø.250 FOR DOWEL PIN
TO BE MATCH DRILLED
TO 21C9826 AT ASSEMLBY)

DO NOT BREAK THRU

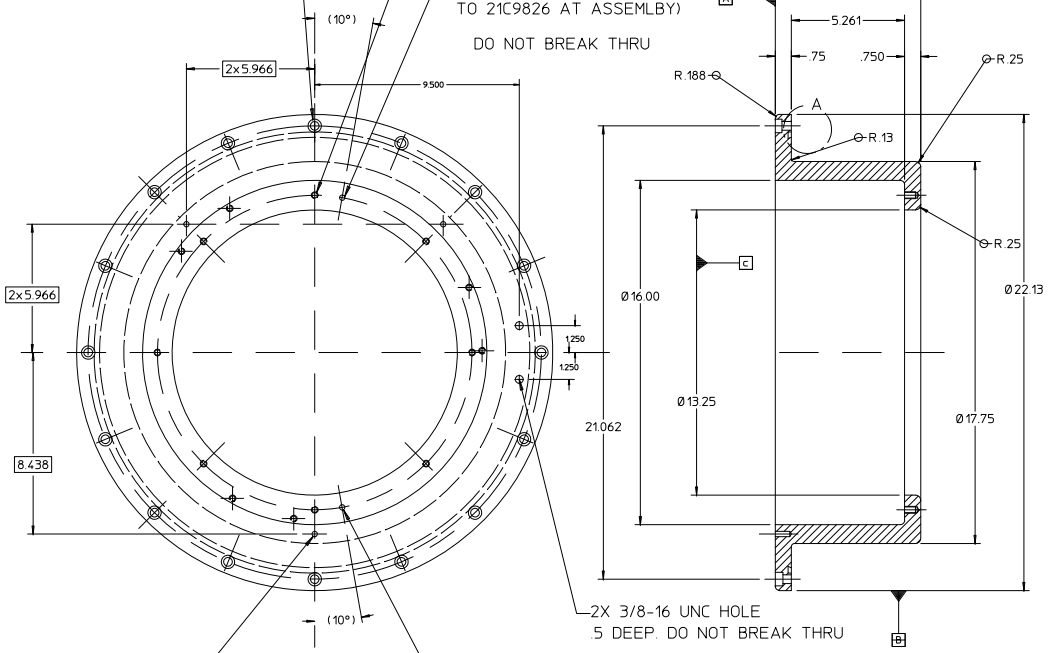

3X Ø.2496/.2500
X .75 DP

(Ø.250 FOR DOWEL PIN
TO BE MATCH DRILLED
TO 21C9826 AT ASSEMBLY)

DO NOT BREAK THRU

2X 3/8-16 UNC HOLE
.5 DEEP. DO NOT BREAK THRU

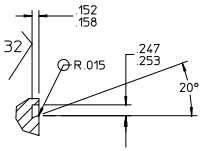

Ø20.020
Ø20.000

DETAIL A
O RING GROOVE FOR 2-389
FULL SCALE

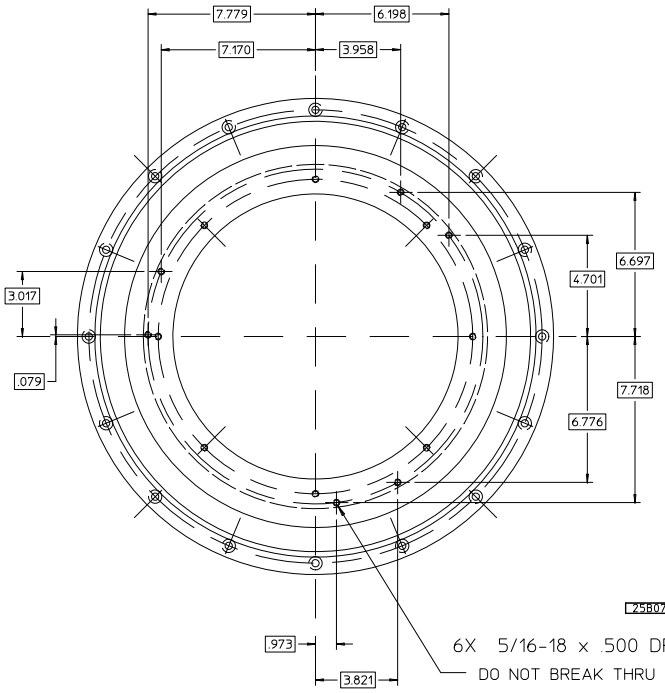

25B0716

6X 5/16-18 x .500 DP
DO NOT BREAK THRU
⌖ Ø .014 A B C

REQD	ITEM	PART NO.	DESCRIPTION
			AL. FORGED RING - 6061-T6

REV	DWG	CHK	ZONE	DATE	CHANGES

UNLESS OTHERWISE SPECIFIED
TOLERANCES: .X ± FRAC. ±1/64; .XX ± .010 ANGLES ± 1°; XXX ± .005 FINISH 125
THREADS ARE CLASS 3
CHAMFER ENDS OF ALL SCREW THREADS 30° OF 1.5 X DIA. TAG BELOW WITH MINOR MAJ. DIA. ON MACHINE CUT THREADS.
BREAK EDGES .016 MAX. ON MACHINED WORK REMOVE BURRS WELD SPLATTER & LOOSE SCALE
REFERENCES ANSI Y14.5 & B46.1

SHOP ORDERS
ACCT NO. | SERIAL NO.
DATE ISSUED | NO. REQD.
DATE LOAN | NO. REQD.
DELIVER
FURNACE TREATMENT: UHV CLEAN
ITEM: TAG
MATL
CHK'D: J. M. PRUYN — DATE: 5/15/99
DR: D. CHENG — DATE: 4/16/99

LAWRENCE BERKELEY LABORATORY
UNIVERSITY OF CALIFORNIA-BERKELEY
SNS - FRONT END SYSTEM
ION SOURCE PROTOTYPE DESIGN
PRIMARY REENTRANT CYLINDER

PATENT CLEAR	DWG. TYPE	SHOWN ON	SCALE	DO NOT SCALE PRINTS
			FULL	

MICROFILMED | DESIGN ACCT NO. 821014 | CATEGORY CODE | DWG. NO. 25B0716 | SIZE | REV.

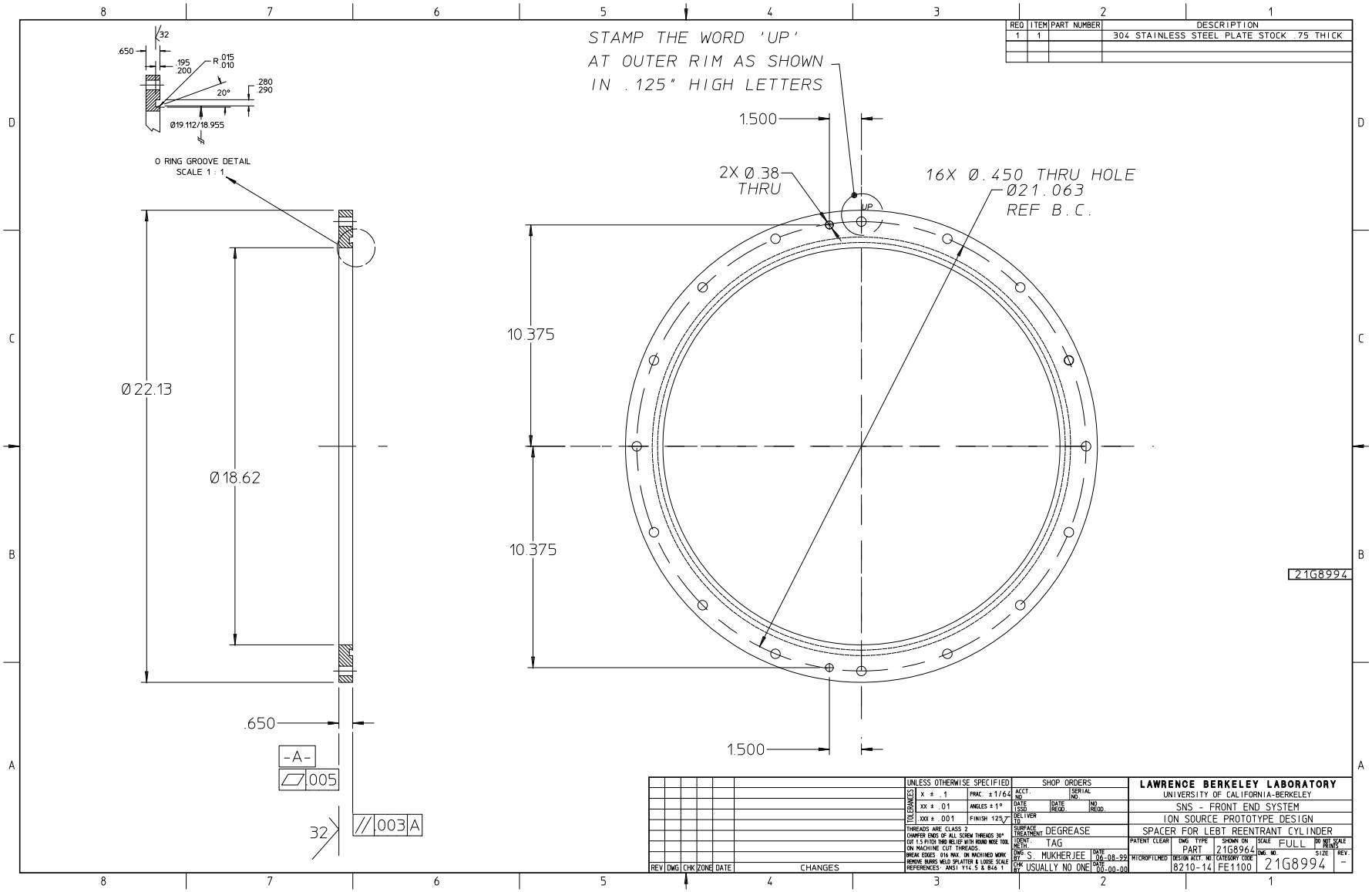

REQ	ITEM	PART NUMBER	DESCRIPTION
1	1		304 STAINLESS STEEL PLATE STOCK .75 THICK

21G8994

REV	DWG	CHK	ZONE	DATE	CHANGES

UNLESS OTHERWISE SPECIFIED
TOLERANCES: X ± .1 FRAC. ±1/64; XX ± .01 ANGLES ± 1°; XXX ± .001 FINISH 125
THREADS ARE CLASS 2.
CHAMFER ENDS OF ALL SCREW THREADS 30° OAT 1.5 PITCH THRU RELIEF WITH ROUND NOSE TOOL ON MACHINE CUT THREADS.
BREAK EDGES .016 MAX. ON MACHINED WORK. REMOVE BURRS WELD SPLATTER & LOOSE SCALE
REFERENCES: ANSI Y14.5 & B46.1

SHOP ORDERS
ACCT. NO.
SERIAL NO.
DATE ISSD
DATE REQD.
NO REQD.
DELIVER TO
SURFACE TREATMENT DEGREASE
IDENT. METH. TAG
DWG BY S. MUKHERJEE DATE 06-08-99
CHK BY USUALLY NO ONE DATE 00-00-00

LAWRENCE BERKELEY LABORATORY
UNIVERSITY OF CALIFORNIA-BERKELEY

SNS - FRONT END SYSTEM
ION SOURCE PROTOTYPE DESIGN
SPACER FOR LEBT REENTRANT CYLINDER

PATENT CLEAR	DWG TYPE	SHOWN ON	SCALE	DO NOT SCALE PRINTS
	PART	21G8964	FULL	
MICROFILMED	DESIGN ACCT. NO.	CATEGORY CODE	DWG NO.	SIZE / REV.
	8210-14	FE1100	21G8994	-

21G8972	REQD	ITEM	PART NUMBER	DESCRIPTION
	4			3/4 SOCKET HEAD SOLDER SCREW STOCK

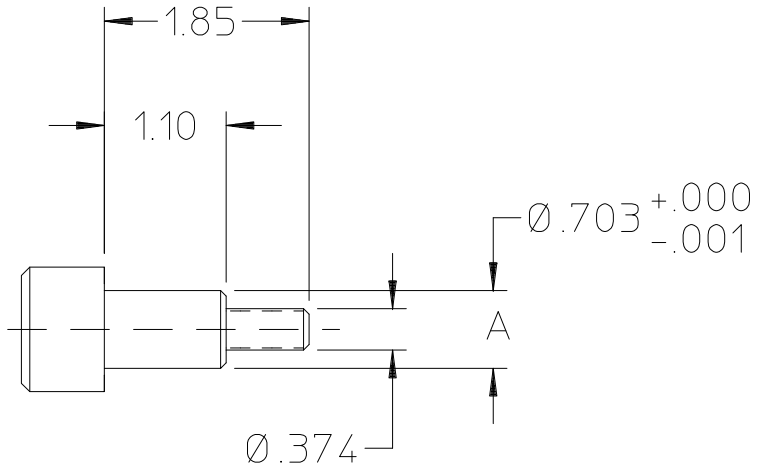

NOTE:

MATCH DIA-A WITH FLANGE HOLES

ON DRAWING 21C9976 SLIDE FIT

REV	DWN	CHK	DATE	DESCRIPTION

UNLESS OTHERWISE SPECIFIED

TOLERANCE .X ± .1 .XX ± .01 .XXX ± .001

SURFACE FINISH 125 √

1. SAWED, FLAMECUT, SHEARED OR CUT STOCK FINISH.
2. THREADS CLASS 2.
3. CHAMFER ENDS OF ALL SCREW THRDS 30°.
4. 1 1/2 PITCH RELIEF WITH ROUND NOSE TOOL ON ALL MACHINE CUT THRDS.
5. BREAK EDGES 1/64 MAX. ON MACHINE WORK.
6. REMOVE BURRS, LOOSE SCALE AND WELD SPLATTER.
7. REF.-USASI OR ASA STDS SECT Y-14 & B46-1.

SHOP ORDERS

ACCT NO | SER NO

DATE ISSD | DATE REQD | NO REQD

DELIVER TO

SURFACE TREATMENT DEGREASE

IDENTIFIC METHOD TAG

DWG BY S. MUKHERJEE | DATE 06-08-99

CHK BY USUALLY NO ONE | DATE 00-00-00

LAWRENCE BERKELEY LABORATORY

UNIVERSITY OF CALIFORNIA-BERKELEY

SNS - FRONT END SYSTEM

ION SOURCE PROTOTYPE DESIGN

LEBT FLANGE ASSEMBLY CENTERING PINS

PAT CLEAR	DWG TYPE	SHOWN ON	SCALE: FULL
	DETAIL	00X0000	DO NOT SCALE PRINTS
MICROFILMED	DESIGN ACCT NO	CATEGORY CODE	DWG NO REV
	8210-14	FE1100	21G8972

REQ	ITEM	PART NUMBER	DESCRIPTION
2	1	21C9284	BRACKET PLATE SIDE
2	2	21C9284	BRACKET PLATE TOP
2	3	21C9284	CLAW-BRACKET FIXED
2	4	21C9284	CLAW-BRACKET MOVING
2	5	-	SCREW JACK (1 TON CAPACITY, 20:1 RATIO)

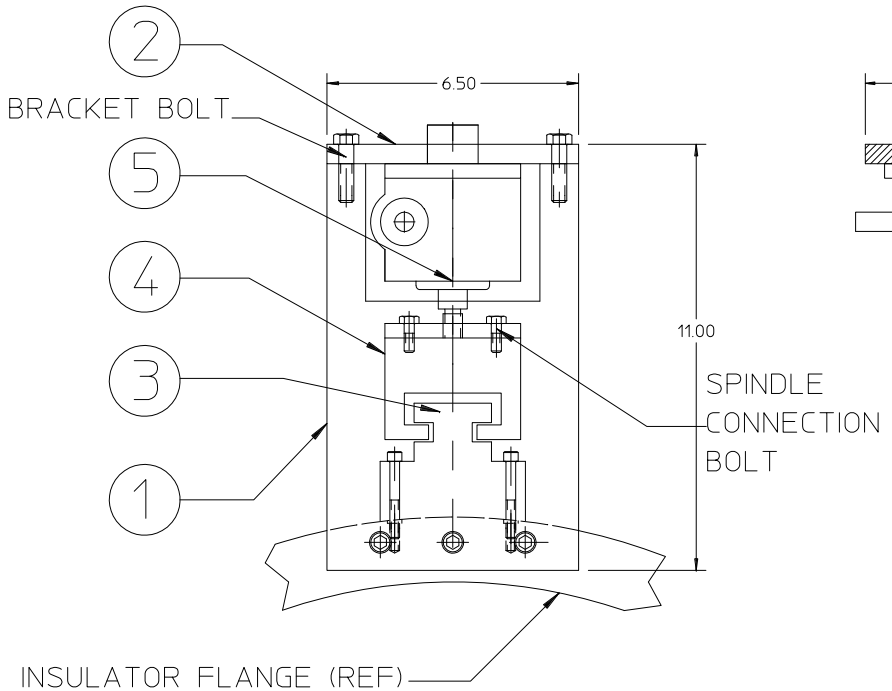

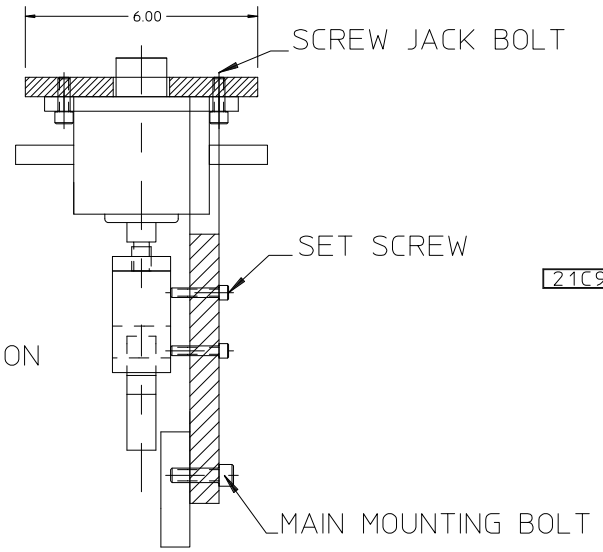

21C9273

REV	DWG	CHK	ZONE	DATE	CHANGES

UNLESS OTHERWISE SPECIFIED

TOLERANCES: .X ± .1 | FRAC. ± 1/64 | .XX ± .01 | ANGLES ± .01° | .XXX ± .001 | FINISH 125

THREADS ARE CLASS 2
CHAMFER ENDS OF ALL SCREW THREADS 30°.
CUT 1.5 PITCH THRD RELIEF WITH ROUND NOSE TOOL ON MACHINE CUT THREADS.
BREAK EDGES .016 MAX. ON MACHINED WORK.
REMOVE BURRS WELD SPLATTER & LOOSE SCALE
REFERENCES: ANSI Y14.5 & B46.1.

SHOP ORDERS
ACCT. NO. | SERIAL NO.
DATE ISSD | DATE REQD. | NO. REQD.
DELIVER TO
SURFACE TREATMENT: DEGREASE
IDENT. METH.: TAG
DWG BY: S. MUKHERJEE | DATE: 09-15-99
CHK BY: USUALLY NO ONE | DATE: 00-00-00

LAWRENCE BERKELEY LABORATORY
UNIVERSITY OF CALIFORNIA-BERKELEY

SNS - FRONT END SYSTEM
LEBT ION-SOURCE MECHANICAL STEERING
SCREW JACK ASSEMBLY

PATENT CLEAR	DWG. TYPE	SHOWN ON	SCALE	DO NOT SCALE PRINTS
	ASSEMBLY	21G9006	FULL	
MICROFILMED	DESIGN ACCT. NO.	CATEGORY CODE	DWG. NO.	SIZE / REV.
	8210-14	FE1100	21C9273	-

REQ	ITEM	PART NUMBER	DESCRIPTION
2	1	-1	SLIDING BRACKET (6061-T4 ALUMINUM)
2	2	-2	FIXED BRACKET (6061-T4 ALUMINUM)
2	3	-3	TOP PLATE SCREW JACK MOUNT (6061-T4 ALUMINUM)
2	4	-4	SIDE PLATE SCREW JACK MOUNT (6061-T4 ALUMINUM)

3 TOP PLATE

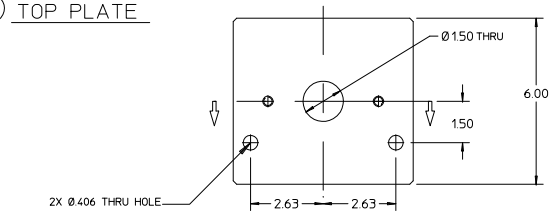

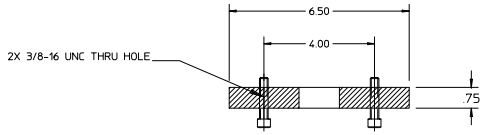

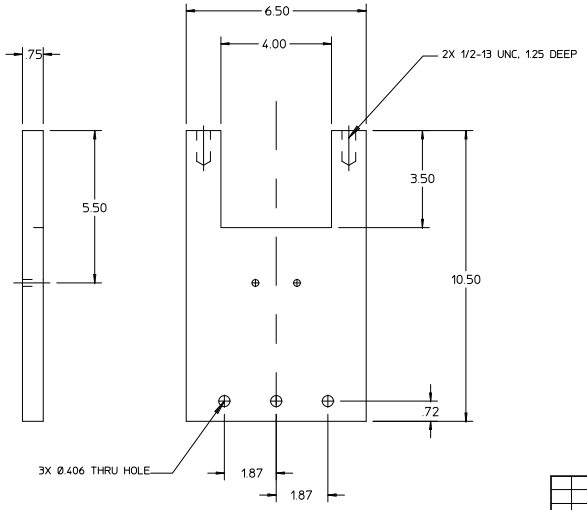

4 SIDE PLATE

1 SLIDING BACKET

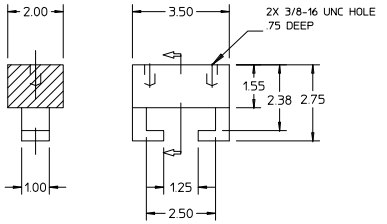

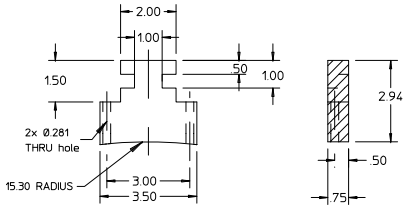

2 FIXED BRACKET

21C9284

REV	DWG	CHK	ZONE	DATE	CHANGES

UNLESS OTHERWISE SPECIFIED
TOLERANCES: X ± .1 | FRAC. ± 1/64 | XX ± .01 | ANGLES ± 1° | XXX ± .001 | FINISH 125
THREADS ARE CLASS 2.
CHAMFER ENDS OF ALL SCREW THREADS 30° OAT 1.5 PITCH THRD RELIEF WITH ROUND NOSE TOOL ON MACHINE CUT THREADS.
BREAK EDGES .016 MAX. ON MACHINED WORK. REMOVE BURRS WELD SPLATTER & LOOSE SCALE
REFERENCES: ANSI Y14.5 & B46.1

SHOP ORDERS
ACCT. NO. | SERIAL NO.
DATE ISSD | DATE REQD. | NO REQD.
DELIVER TO
SURFACE TREATMENT: DEGREASE
IDENT. METH.: TAG
DWG BY: S. MUKHERJEE | DATE: 09-15-99
CHK BY: USUALLY NO ONE | DATE: 00-00-00

LAWRENCE BERKELEY LABORATORY
UNIVERSITY OF CALIFORNIA-BERKELEY
SNS - FRONT END SYSTEM
LEBT- ION SOURCE MECHANICAL STEERING
SCREW JACK BRACKET PARTS

PATENT CLEAR	DWG TYPE	SHOWN ON	SCALE	DO NOT SCALE PRINTS
	ASSEMBLY	21C9273	1/4	
MICROFILMED	DESIGN ACCT. NO.	CATEGORY CODE	DWG NO.	SIZE / REV.
	8210-14	FE1100	21C9284	-